DACIA SANDERO

ALL THE ESSENTIALS

Dacia Sandero Stepway reaffirms its crossover style: take escapism to the next level thanks to the new extreme finish, which gives the vehicle an even stronger off-road look. Rise to the challenge of real life: thanks to its large extendible boot, switch from city life to adventure in a flash.

UP TO 1,455 L OF BOOT SPACE

MODULAR ROOF BARS(2)

10" MEDIA NAV LIVE WITH CONNECTED NAVIGATION(1)

7" DIGITAL DRIVER DISPLAY(1)

EXTENDED GRIP FUNCTION(1)

(1) Standard on Extreme. (2) From Expression version.

REDESIGNED FOR ADVENTURE

Dacia Sandero Stepway boosts its adventurous character with its sculpted bonnet, assertive front end, raised ground clearance and modular roof bars[1].

Its protective elements made from Starkle® – a material that is 20% recycled – reveal its dynamic and robust style as an authentic crossover, while protecting the lower bodywork, wheel arches and exposed side parts.

The aesthetics of the new "pixelated" grille and the inverted T-shaped brand light express its modernity. The incorporation of new headlights reinforces the Dacia brand identity.
New 16" alloy wheels, black shark-fin aerial, new body colours. Perfect adventurer, perfect urban elegance.

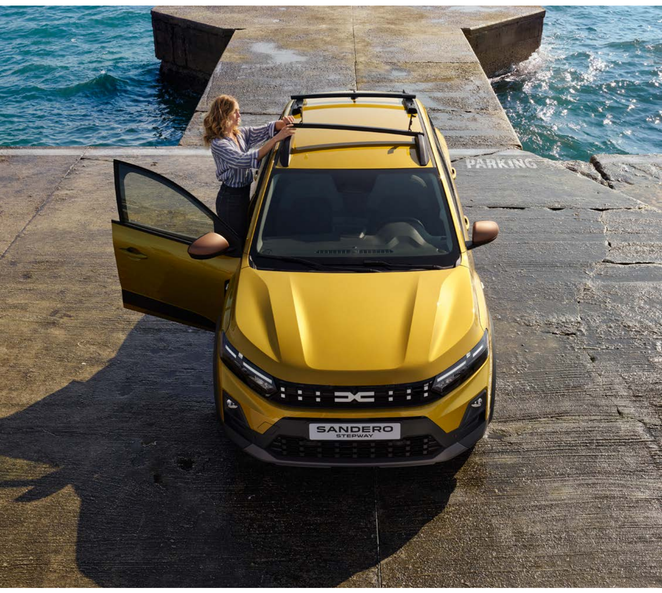

Dacia Sandero Stepway goes further by adopting a distinctive look from every angle: with its new bumper and decal on the boot tailgate, the rear end emphasises its personality.

New front brand light

Starkle® wheel protectors

(1) From Expression.

ONE GREAT ENGINE

Available with the 110 TCe engine, this latest-generation 3-cylinder direct injection turbo engine gives you the best driving pleasure and possible performance/fuel consumption ratio.

COMFORT THROUGHOUT

Sandero Stepway moves forward with unprecedented comfort and a completely redesigned interior across all versions: new air vents that visually echo the exterior design and a flat-bottomed steering wheel. New technological features have been integrated such as the 7" digital driver display(1) and the 10" multimedia display(1) with connected navigation.

7" digital driver display(1)

10" screen with connected navigation(1)

(1) Standard on Extreme.

ALL THE SPACE YOU NEED

Fold down the seats with a single touch, adjust the loading capacity as required and live life to the full.

Thanks to an ingenious system, you can easily adjust your roof bars to attach a storage box, bike rack or ski rack.

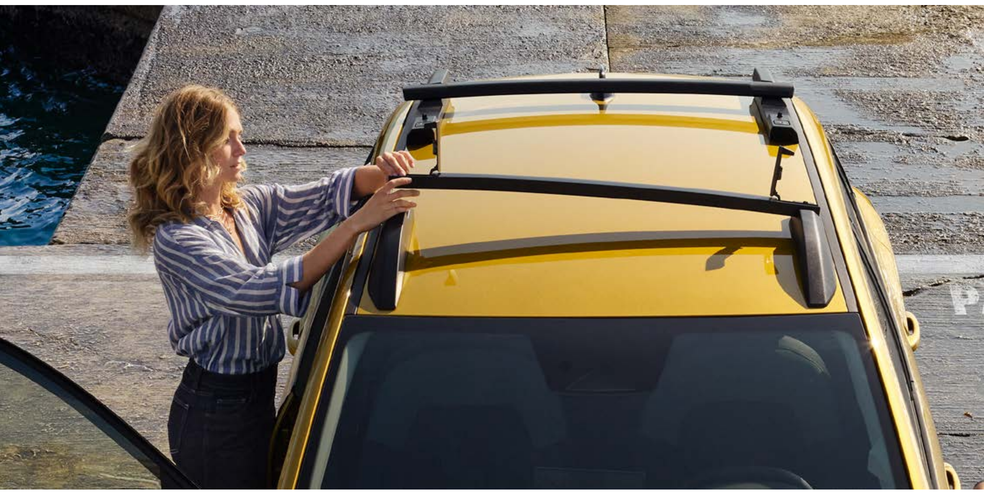

Modular transversal roof bars[1]

(1) Available from Expression.

YOUCLIP FASTENING SYSTEM: MORE SPACE FOR YOU

YouClip makes your life even more comfortable and organised with its clever multi-purpose fastening system for hanging the accessories available in the range. These can be clipped to the fasteners distributed throughout the passenger compartment and boot: up to 3 fasteners as standard.

2 additional attachment points behind the headrests are available as an accessory to extend your possibilities up to 5 YouClip points.

As standard, 3 YouClip

Fastening points– Bag

CHOOSE YOUR MULTIMEDIA PREFERENCES

Dacia Sandero Stepway includes a new multimedia offering. You can choose your level of equipment: Media Control, controlled from your smartphone and integrated into the dashboard design, allows you to control radio, music, Bluetooth® connection, USB and telephony.

The new 10" Media Display(1), featuring an easy-to-use customisable interface, allows you to easily access GPS navigation via your smartphone, manage calls and music, and use voice commands.

10" Media Display

The new Media Nav Live(2) transforms your dashboard into a truly smart control centre. From the 10" touchscreen: navigation and connected services in real time, integrated app store and 3D Arkamys® audio system for high-quality sound immersion.

These last two systems are compatible with wired and Wi-Fi connections with Android Auto™ and Apple CarPlay® smartphone mirroring.

New Media Nav Live(2)

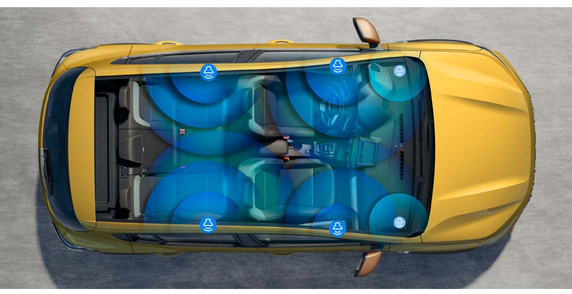

3D audio system developed by Arkamys®(3)

(1) Standard on Expression. (2) Standard on Extreme. (3) Extreme only.
Android Auto™ is a Google Inc. brand.
Apple CarPlay® is an Apple Inc. brand.

SAFETY ALL THE TIME

At Dacia, safety has always been at the heart of our concerns. Built on the latest platform designed for our vehicles, Dacia Sandero Stepway has a reinforced body structure and new-generation assistance systems. Thanks to the My Safety button, you can deactivate some of these aids at each start-up as well as when the vehicle is running. With Dacia, drive with peace of mind.

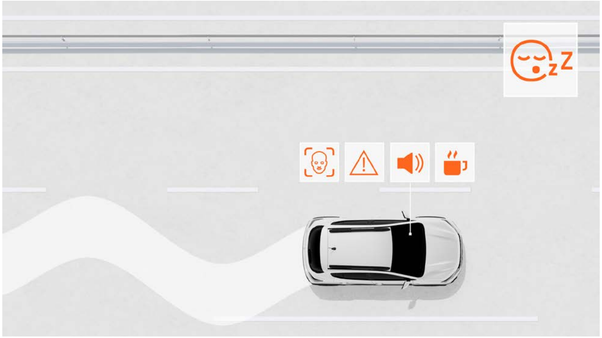

DRIVER DROWSINESS AND ATTENTION WARNING SYSTEM
This assistance system warns the driver if fatigue is detected and prompts them to take a break.

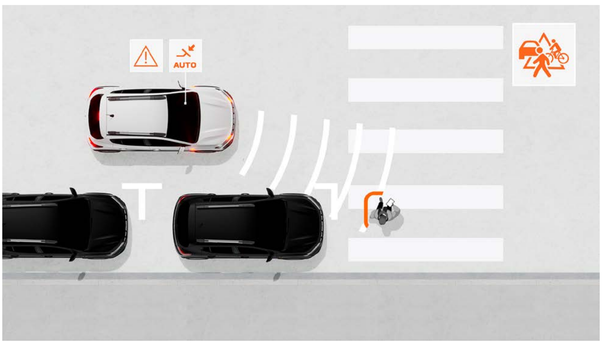

AUTOMATIC EMERGENCY BRAKING (AEBS) WITH PEDESTRIAN/ CYCLIST DETECTION
This system prevents the risk of frontal collisions involving other vehicles, pedestrians or cyclists straight ahead and at junctions. It alerts the driver and can automatically brake the vehicle if necessary.

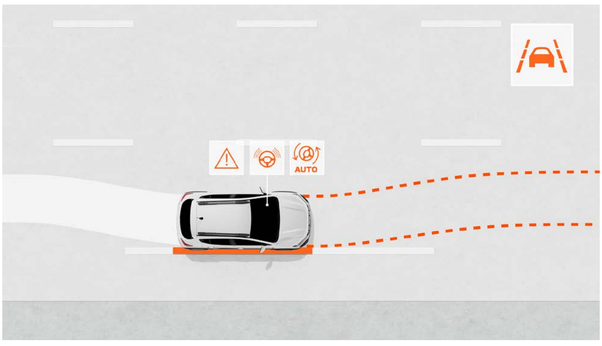

LANE KEEPING ASSIST
Monitors the vehicle's path in its lane and corrects it if necessary by automatically steering it.

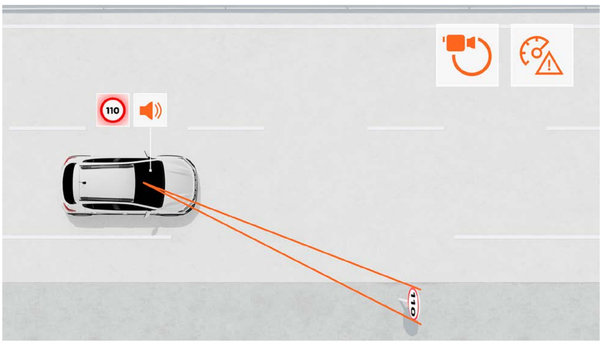

TRAFFIC SIGN RECOGNITION WITH SPEED ALERT
Provides a reliable real-time indication of the maximum speed on the road and warns the driver if they exceed the speed limit with visual and audible alerts (which can be disabled).

DISCOVER THE EQUIPMENT

COLOUR PALETTE

+

TRIMS

+

ACCESSORIES

+

ENGINES

+

EQUIPMENT AND OPTIONS

+

DIMENSIONS

+

06. COLOUR PALETTE

AMBER YELLOW	GLACIER WHITE	PEARL BLACK	SHADOW GREY	IRON BLUE
SAFARI BEIGE	CEDAR GREEN			

AMBER YELLOW(1)*

GLACIER WHITE(2)

PEARL BLACK(1)

SHADOW GREY(1)

IRON BLUE(1)*

SAFARI BEIGE(1)*

CEDAR GREEN(1)*

(1) Metallic paint. (2) Opaque paint.
* Not available on essential.
Non-binding photos.

essential

MAIN EQUIPMENT

EXTERNAL APPEARANCE
- "Pixelated" front grille with Dacia logo
- Brand light in the shape of an inverted "T" and automatic LED daytime running lights
- Front and rear and side skid plates made from Starkle® recycled materials
- Black exterior door handles
- Black door mirrors
- Black modular longitudinal roof bars
- 16" Erelia style flexwheel

INTERIOR APPEARANCE
- My Safety button to manage driver assistance systems
- Anti-locking braking system (ABS) + Emergency Brake Assist (EBA)
- Automatic emergency braking with pedestrian/cyclist detection
- Electronic Stability Control (ESC) with Hill Start Assist (HSA)
- Emergency call (E-call)
- Event (accident) data logger
- Vehicle pre-configuration for alcolock immobiliser
- Road sign recognition and speeding alert
- Lane change warning
- Lane keeping assist
- Driver attention alert system
- Front / rear "Rescue Code®" QR codes
- Driver's front airbag/passenger's front airbag can be switched off
- Shoulder and curtain side airbags
- Rear parking sensors
- Tyre pressure detection
- Tyre inflation kit
- Isofix child seat mounting system on rear side seats

DRIVING AND CONTROL DEVICES
- Electric power steering
- Stop & Start, ECO mode
- On-board computer: distance travelled, average speed, range, average consumption
- Rain and light sensors
- Cruise control and speed limiter with audible warning

VISIBILITY
- Door mirrors with interior manual adjustment

COMFORT
- Manual air conditioning
- Electric and automatic door locking while driving and folding key
- Automatic locking of doors when in motion
- Electric front windows
- Height- and reach-adjustable steering wheel
- 1 x 12V socket in the front

MULTIMEDIA AND AUDIO
- New Media Control: DAB radio with steering wheel controls, jack socket and 1 USB-C socket, 2 speakers, Bluetooth® telephone system with satellite controls on the steering wheel, fixed smartphone holder on the dashboard, new Dacia Media Control smartphone app

expression

MAIN EQUIPMENT
expression = essential+

EXTERNAL APPEARANCE
- Body-tone outside door handles
- Body-tone door mirrors
- Modular longitudinal roof bars
- 16" Artara style flexwheel
- 3D PIP side protectors
- Shark fin aerial

INTERIOR APPEARANCE
- Body-coloured door opening handles
- New special upholstery in expression version
- Fabric upholstery on the dashboard and front door armrests
- Mid-high centre console with armrest + USB-C in the rear

VISIBILITY
- Front fog lights
- Electrically operated door mirrors
- Reversing camera

COMFORT
- Soft feel height- and reach-adjustable steering wheel
- One-touch driver-seat window control (with anti-trapping function), non one-touch passenger side
- Electric rear windows

MULTIMEDIA AND AUDIO
- Media Display: multimedia system with 10" touchscreen, DAB digital radio, smartphone mirroring via USB cable and Wi-Fi, Bluetooth® connection, satellite controls on steering wheel, 4 speakers, 3 USB-C ports

MAIN EQUIPMENT
extreme = expression+

EXTERNAL APPEARANCE
- Specific outdoor design with bottom-of-door protections and side stickers with topographic patterns
- Copper Brown finish: door mirrors, "Stepway" inscription on roof bars, decorative fog moulding
- 16" Tamia black alloy wheels
- Shark fin aerial
- Tinted rear windows

INTERIOR APPEARANCE
- Special washable MicroCloud upholstery for extreme
- Copper Brown decoration: decorative moulding on the door panels
- MicroCloud covering on dashboard and front door armrests
- Front + rear rubber mats with topographic patterns
- Door sill with topographic patterns

ACTIVE AND PASSIVE SAFETY
- Front parking distance control
- Blind spot warning

DRIVING AND CONTROL DEVICES
- Extended Grip function
- Keyless entry

COMFORT
- Automatic air conditioning system
- Modular boot with twin-level floor
- 7" digital driver display
- Electric parking brake
- Heated front seats and steering wheel
- Multi-view camera
- Automatic dipped/main beam headlight activation and electrically folding mirrors

MULTIMEDIA AND AUDIO
- Removable telephone holder
- Nav Pack: Media Nav Live: multimedia system with 10" touchscreen, connected navigation with real-time traffic information, DAB digital radio, smartphone mirroring via USB cable or wirelessly via Wi-Fi, Bluetooth® connection, satellite controls on the steering wheel, 6 speakers (4 speakers + 2 tweeters), 3 USB-C ports

STYLE PACK (ESSENTIAL & EXPRESSION)

Roof spoiler

Shark fin aerial

Illuminated door sills

PROTECTION PACK (ESSENTIAL)

Front & rear lower door protectors

Front & rear mud guards

Boot mat

Available for Expression & Extreme versions:
Mud guards & boot mat

STORAGE PACK

Magnetic phone holder

Rear tray table & fixings

Storage pack + available with 2 x rear tray tables & fixings

TOURING PACK

Roof bars

Roof box 400L

YOUCLIP ON THE GO

3-in-1 cup holder (cup holder + lamp + hook)

Multifunction cup holder

Hook

Lamp

Bag

Wireless smartphone charger

Smartphone holder

Tablet holder

Headrest base mount

Foldable shopping bag

Glasses case

CYCLE PACK

Roof bars

2 x bike carriers for roof

TOW BARS

Swan neck towbar 13 pin
Removable towbar 13 pin

PREMIUM DELIVERY PACKS

Premium mats

Safety kit

Key card wallet

Textile boot mat

PREMIUM DELIVERY PACK
Premium mats
Safety kit
Key card wallet

PREMIUM DELIVERY PACK+
Premium mats
Safety kit
Key card wallet
Textile boot mat

SPARE WHEEL KIT

All accessories purchased prior to vehicle registration come with a 3 year manufacturers warranty
Accessories are fitted post production and may have an impact on WLTP fuel (actual) consumption and CO_2 figures

06. ENGINES

	TCe 110
ENGINES	
Fuel	Unleaded petrol
Max. power kW CEE (hp) at an engine speed of (rpm)	81 from 5,000 to 5,250
Max. torque Nm CEE (m.kg) at an engine speed of (rpm)	200 from 2,900 and 3,500
Gearbox type	Manual 6-speed
Injection type	Turbo direct injection
Capacity (cm3)	999
Number of cylinders/valves	3/12
Emission control standard	Euro 6e bis
CHASSIS AND STEERING	
Tyre dimensions	205/60 R16 92H
Steering - Turning circle, kerb to kerb (m)	10.64
Front suspension	Pseudo McPherson with lower wishbone, coil spring suspension with telescopic hydraulic shock absorbers and anti-roll bar
Rear suspension	Semi-rigid axle with anti-roll bar spring suspension and telescopic hydraulic shock absorbers
PERFORMANCE	
Maximum speed (mph)	111
0-100kmh (s)	10
FUEL CONSUMPTION AND EMISSIONS(1)	
Approval protocol	WLTP(2)
Fuel tank capacity (l)	50
CO2 emissions (g/km)	128/129
VOLUMES AND WEIGHTS (KG)	
Minimum curb weight in running order	1,095
Maximum kerb weight in running order	1,149
Gross train weight (GTW)	2,685
Gross vehicle weight (GVW)	1,585
Max. braked towing weight	1,100

(1) Official consumption and emissions according to applicable regulations. (2) WLTP (Worldwide Harmonised Light Vehicle Test Procedures): this new protocol provides results much closer to those found in daily use compared with the NEDC protocol. CO_2 emissions are certified using a standard, regulatory method. This method is identical for all manufacturers and enables vehicles to be compared with one another.

06. EQUIPMENT AND OPTIONS

	essential	expression	extreme
EXTERNAL APPEARANCE			
LED brand light	•	•	•
LED automatic daytime running lights	•	•	•
Grille with "Stepway" inscription	White	White	White
Dacia rear lettering	White	White	Copper Brown
Front/rear bumpers	Body-coloured	Body-coloured	Body-coloured
Megalith Grey front and rear skid plates	•	•	•
Side protection stickers / snorkel-type sticker	-	Sticker	Specific design extreme version with snorkle
External protective elements	Starkle®	Starkle®	Starkle®
Exterior door handles	Black	Body-coloured	Body-coloured
Door mirrors	Black	Body-coloured	Copper Brown
Longitudinal roof bars	•	-	-
Modular longitudinal roof bars (Megalith Grey)	-	•	•
16" Erelia two-tone wheel trims	•	-	-
16" Atara flexwheels	-	•	-
16" Tamia black alloy wheels	-	-	•
Shark fin aerial	-	•	•
INTERIOR APPEARANCE			
Centre of air vents	Copper Brown	Copper Brown	Copper Brown
Air vent surrounds	Black	Fog Grey	Fog Grey
Inside door opening handles	Black	Steel Grey	Steel Grey
Upholstery on the dashboard and front door armrests/trim on the front door panels	-/-	Blue Fabric / -	MicroCloud/Copper Brown
Split-fold rear bench 1/3 & 2/3	•	•	•
Soft feel steering wheel	-	•	•
Specific fabric upholstery for essential/ expression version	•	•	-
Specific MicroCloud upholstery	-	-	•
Dacia marking on rubber floor mat	-	-	•
YouClip attachment system	•	•	•
ACTIVE AND PASSIVE SAFETY			
My Safety button to manage driver assistance systems	•	•	•
Anti-locking braking system (ABS) + Emergency Brake Assist (EBA)	•	•	•
Automatic emergency braking with pedestrian/ cyclist detection	•	•	•
Electronic Stability Control) with Hill Start Assist (HSA)	•	•	•
Emergency call (E-call)	•	•	•
Event (accident) data logger	•	•	•
Traffic sign recognition with speed alert	•	•	•
Lane change warning	•	•	•
Lane keeping assist	•	•	•
Driver attention alert	•	•	•
Front / rear "Rescue Code®" QR Code	•	•	•
Driver's front airbag / passenger's side airbag, can be disabled	•/•	•/•	•/•
Shoulder and curtain side airbags	•	•	•
Rear parking sensors	•	•	•
Rear-view camera	-	•	•
Multiview camera	-	-	•
Front parking distance control	-	-	•
Blind spot warning	-	-	•
Electric parking brake with armrest with storage, 1 12V socket and 1 USB-C socket in the rear	-	-	•
Driver attention warning and drowsiness detection	•	•	•
Automatic switching between main/dipped beam headlights	-	-	•
Tyre pressure detection	•	•	•
Tyre inflation kit	•	•	•
Isofix child seat mounting system on rear side seats	•	•	•

	essential	expression	extreme
DRIVING AND CONTROL INSTRUMENTS			
3.5" black-and-white digital instrument panel	•	•	-
7" digital driver display	-	-	•
Electrical power steering	•	•	•
Stop & Start	•	•	•
On-board computer: distance travelled, average speed, range, average consumption	•	•	•
Rain and light sensors	•	•	•
Hands-free card	-	-	•
Cruise control/Speed limiter with audible warning	•	•	•
Extended Grip	-	-	•
VISIBILITY			
Front fog lights	-	•	•
Door mirrors manually adjustable from inside	•	-	-
Electrically adjustable door mirrors	-	•	•
Electrically folding door mirrors	-	-	•
COMFORT			
Wireless Charging - Wireless Charger	-	-	•
Lower central console with central armrest	•	-	-
Mid-high centre console with centre armrest and 1 USB-C port at the rear	-	•	•
Manual heating and air conditioning system	•	•	-
Automatic heating and air conditioning system	-	-	•
Electric door locking with radio frequency remote control	•	•	•
Automatic locking of doors when in motion	•	•	•
Driver and passenger electric front windows	•	•	•
One-touch driver-seat window control (with anti-trapping function), non one-touch passenger side	-	•	•
Rear electric windows	-	•	•
Height- and reach-adjustable steering wheel	•/-	•/•	•/•
Front ceiling light	•	•	•
1 front 12 V socket	•	•	•
Heated front seats	-	-	•
Heated steering wheel	-	-	•
Modular boot with twin-level floor	-	-	•
MULTIMEDIA & AUDIO			
New Media Control: DAB radio with steering wheel controls, jack socket and 1 USB-C socket, 2 speakers, Bluetooth® telephone system with satellite controls on the steering wheel, fixed smartphone holder on the dashboard, new Dacia Media Control smartphone app	•	-	-
Media Display: multimedia system with 10" touchscreen, DAB digital radio, smartphone mirroring via USB cable or wirelessly via Wi-Fi, Bluetooth® connection, satellite controls on steering wheel, 4 speakers, 3 USB-C ports and the front and 1 USB-C port at the back of the centre console	-	•	-
Media Nav Live: 10" screen, navigation with real-time traffic + Arkamys® 6-speaker 3D audio system + DAB digital radio, smartphone mirroring via USB cable or wirelessly via Wi-Fi, Bluetooth® connection, 3 USB-C ports in the front and 1 USB-C at the back of the centre console	-	-	•
Removable telephone holder	-	-	•

- : not available ; • : available as standard

06. DIMENSIONS

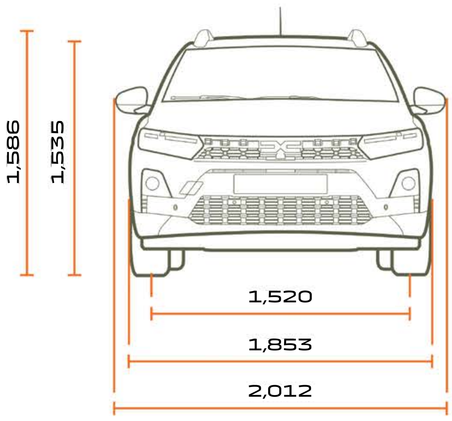

FRONT VIEW

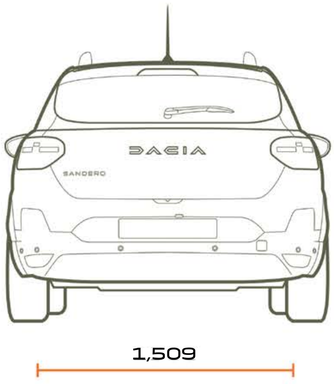

REAR VIEW

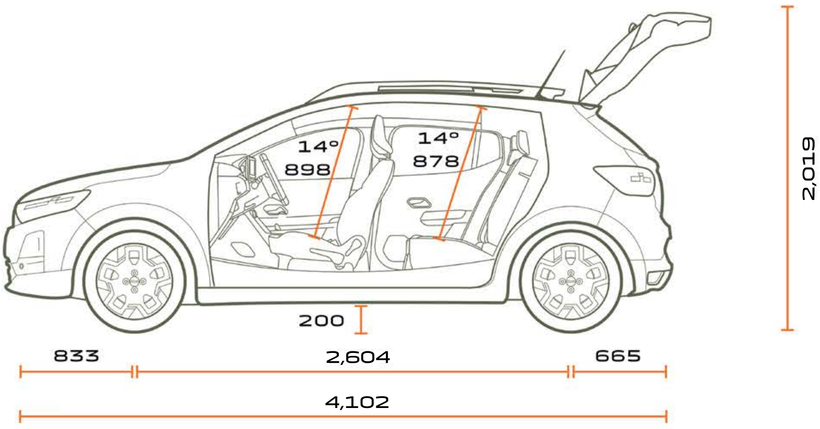

SIDE VIEW

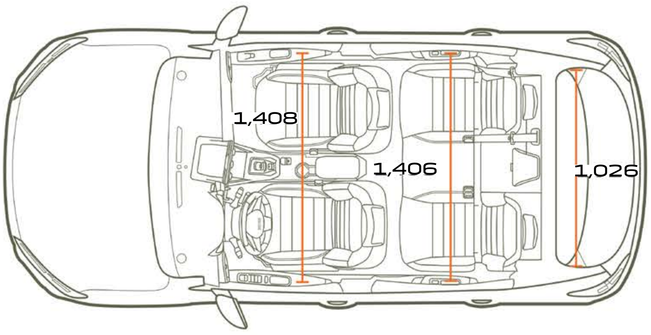

TOP VIEW

BOOT VOLUME (IN DM3 - LITRES)	
Minimum boot volume (ISO 3832 standard)	410
Maximum boot volume (ISO 3832 standard)	1,455
Volume under false floor (ISO 3832)	78

Dimensions in mm.

Every precaution has been taken to ensure that the contents of this brochure were accurate and up to date at the time of its release. This document has been created using pre-production and prototype models. As part of its policy of continuous product improvement, Dacia reserves the right to modify at any time the specifications, vehicles and accessories described and shown. Any such modifications are communicated to Dacia dealers as quickly as possible. Depending on the country of sale, certain versions may differ and certain equipment may be unavailable (as standard, on option or as an accessory). Please consult your Dacia brand representative for the latest information. Because of the limitations associated with the medium, the colours featured in this document may differ slightly from those of the actual paintwork or interior trim. All rights reserved. Reproduction in any format and by any means of all or part of this brochure is prohibited without prior written authorisation from Dacia.

Dacia recommande Castrol

PUBLICIS – PHOTO CREDITS: S. STAUB, ©RENAULT MARKETING 3D-COMMERCE – February 2026

PILAKOUTAS GROUP

77773344

www.pilakoutasgroup.com.cy

Nicosia Showroom: 18 - 20 Aristidou Str., 2370 Agios Dometios

Larnaca Showroom: 17 Eleftherias Avenue, 7102 Aradippou

Limassol Showrooms: 41 Theophanous Kritos, 4152 Kato Polemidia
9-15 Andrea Kariolou Str., 4102 Agios Athanasios

Paphos Showroom: 43 Mesogis Avenue, 8280 Paphos

dacia.com.cy