DACIA JOGGER

THE SUV ESTATE DESIGNED FOR 7

Featuring the length of an estate, the spaciousness of an MPV and the robust style of an SUV, Dacia Jogger surprises by combining the best of these categories in a 7-seater family car. Versatile, elegant and affordable, Jogger fully embodies the Dacia spirit.

UP TO 2,085 L OF BOOT SPACE

3 NEW MULTIMEDIA OFFERINGS

ALL NEW HYBRID 155 TECHNOLOGY(1)

MODULAR ROOF BARS(2)

(1) Also available as a TCe 110 petrol engine. (2) Standard from Expression.

A DESIGN BUILT FOR GETAWAYS

Ready for action with the new Dacia Jogger, its high ground clearance and Starkle® protective features. The redesigned, squarer front end, with its "pixelated" grille and new inverted T-shaped brand light, emphasises its robust character. With its 16" Tamia alloy wheels[1], black shark-fin aerial[2] and new body colours, Dacia's 7-seat SUV estate is decidedly unique.

The rear end is enhanced by a vertical LED brand light. The lower part of the light clusters widens to visually reinforce the vehicle's stance and strength.

Black shark-fin aerial[3]

New T shape rear lights

(1) Standard on Extreme. (2) From Expression. (3) Available from Expression.

MORE THAN JUST FUNCTIONAL

The completely redesigned interior design enhances comfort on board: new seats and door panels, dashboard with decorative inserts and air vents. The extreme version stands out with its green colour scheme, copper-brown door mirror shells, rubber floor mats adding to that 'Extreme' look.

New technology has been integrated such as the 7" digital driver display[1] and the 10" multimedia display with connected navigation.

The new hybrid 155 engine features the e-shifter, a next-generation electronic gear lever that reinvents design and functionality for gear changes.

New automatic gearbox and wireless smartphone charger[2]

7" digital driver display with driving mode information[3]

(1) Standard on Expression hybrid and all Extreme versions. (2) Standard on Extreme. (3) Available on Expression hybrid version and all Extreme versions.

ENJOY JOGGER IN A HYBRID VERSION

Dacia Jogger boosts its range of engines with the new hybrid 155. More power, optimal driving pleasure. It recharges automatically during braking phases and, of course, you benefit from automatic transmission.

A 7 SEAT FAMILY CAR AS STANDARD

Dacia Jogger has a sense of community: family, friends or guests, without leaving anyone behind. To achieve this, it offers the same level of comfort across all rows. Its sculpted seats – adjustable at the front – promise fatigue-free travel for all seven passengers. Dacia Jogger also stands apart through well thought-out details and spaciousness.

In the second row, everything is designed to grow with you: sliding aviation-style tables(1) with cup holders and ultra-practical Isofix attachments for child seats. Record accessibility in the third row, where two individual seats with armrests uncompromisingly accommodate two adults with generous leg room. Storage spaces are distributed throughout the passenger compartment for the benefit of all passengers. Dacia Jogger adds a new dimension to your on-board experience.

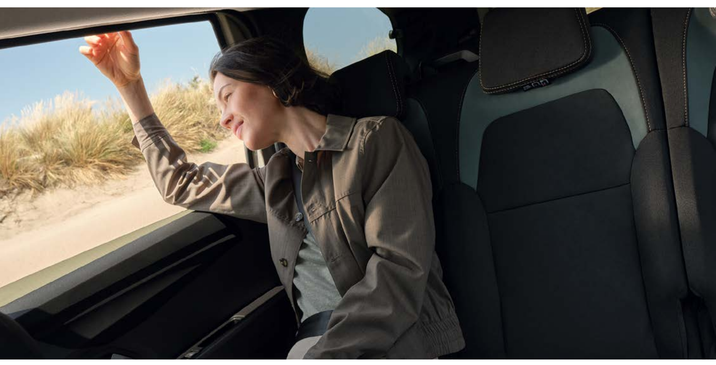

Comfort in the second row

(1) Depending on versions.

FLEXIBILITY INSIDE

Whatever your plans for the day, Dacia Jogger offers unrivalled space and versatility: removable third-row rear seats, 1/3-2/3 split-folding 3-seat bench in the second row, and multiple possible configurations with 2, 3, 4, 5, 6 or 7 seats to suit your needs.

The boot offers up to 2,085 L of space and a loading height that allows you to carry everything you need. And in the hybrid version, all the interior space and versatility are preserved thanks to the clever placement of the battery under the floor. Trust Dacia Jogger to simplify your adventures, be they in the city or further afield.

The hybrid model offers the same space and versatility as other engine types.

EQUIPMENT SUITED TO YOUR LEISURE ACTIVITIES

Explore outdoor activities with the Dacia InNature range of accessories. The Sleep Pack fits into the boot of the Jogger, providing you with a double bed (1.90 m long and 1.30 m wide), a handy removable shelf and 220 litres of storage space. The roof awning(1) is a new, sturdy and weather-resistant accessory that provides instant shade and shelter, while remaining compact and easy to transport.

The InNature roof rack is also ideal for carrying extra luggage and leisure equipment. It attaches easily to the modular roof bars.

YouClip makes your life even more comfortable and organised with its clever multi-purpose fastening system for hanging a wide range of accessories available in the range. These clip onto the fasteners distributed throughout the passenger compartment and boot: up to four fasteners are provided as standard, and two additional points behind the headrests are available as an accessory.

YouClip – lamp

YouClip - 3-in-1 (cup holder + lamp + hook)

YouClip - foldable shopping bag

(1) Supplied with carry bag. Coming soon.

CHOOSE YOUR MULTIMEDIA PREFERENCES

Dacia Jogger incorporates three new comprehensive multimedia packages. You can choose your level of equipment: Media Control[1], controlled from your smartphone and integrated into the dashboard design, allows you to control radio, music, Bluetooth® connection, USB and telephony.

The new 10" Media Display, featuring an easy-to-use customisable interface, allows you to easily access GPS navigation via your smartphone, manage calls and music, and use voice commands.

Media Display[2]

The new Media Nav Live transforms your dashboard into a truly smart control centre. From the 10" touchscreen: navigation and connected services in real time, integrated app store and 3D Arkamys® audio system for high-quality sound immersion. These last two systems are compatible with wired and Wi-Fi connections with Android Auto™ and Apple CarPlay® smartphone mirroring.

Media Nav Live[3]

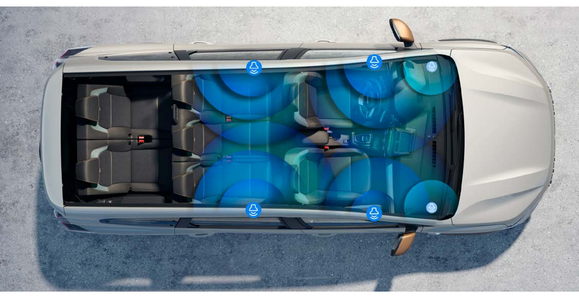

3D audio system developed by Arkamys®

Android Auto™ is a Google Inc. brand. Apple CarPlay® is an Apple Inc. brand.
(1) Standard on Essential. (2) Standard on Expression. (3) Standard on Extreme.

ENHANCED SAFETY

At Dacia, safety has always been at the heart of our concerns. Built on the latest platform designed for our vehicles, Dacia Jogger has a reinforced body structure and new-generation assistance systems. Using the My Safety button you can disable some of these aids. With Dacia, drive with peace of mind.

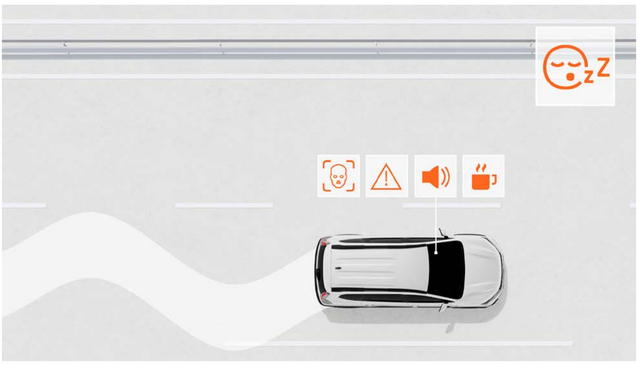

DRIVER FATIGUE DETECTION SYSTEM
This assistance system warns the driver if fatigue is detected and prompts them to take a break.

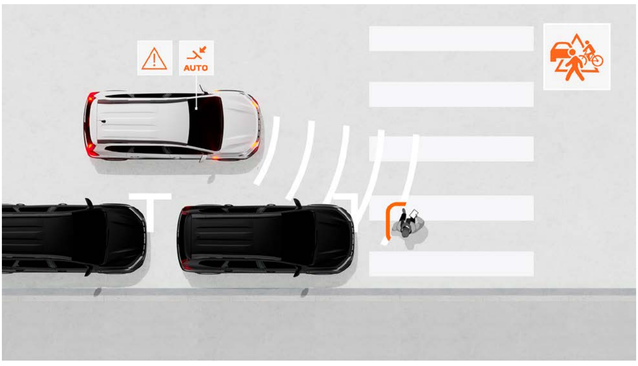

AUTOMATIC EMERGENCY BRAKING (AEBS) WITH PEDESTRIAN/ CYCLIST DETECTION
This system prevents the risk of frontal collisions involving other vehicles, pedestrians or cyclists straight ahead and at junctions. It alerts the driver and can automatically brake the vehicle if necessary.

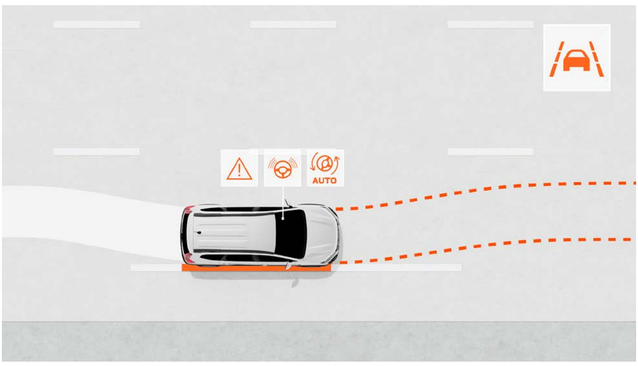

LANE KEEPING ASSIST
This assistance system (which can be disabled) monitors the vehicle's path in its lane and corrects it if necessary by automatically steering it.

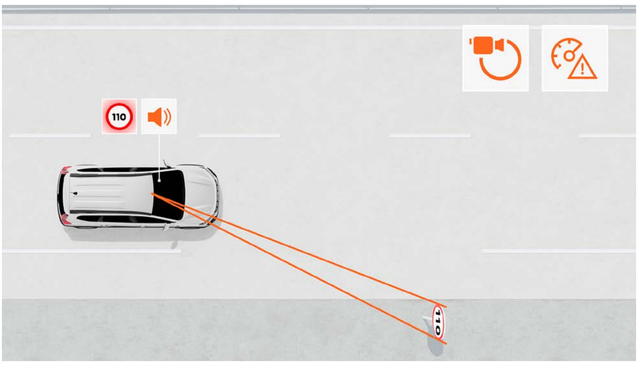

TRAFFIC SIGN RECOGNITION WITH SPEED ALERT
This system provides a reliable real-time indication of the maximum speed on the road and warns the driver if they exceed the speed limit with visual and audible alerts (which can be disabled).

DISCOVER THE EQUIPMENT

COLOUR PALETTE

+

TRIMS

+

ACCESSORIES

+

ENGINES

+

EQUIPMENT AND OPTIONS

+

DIMENSIONS

+

06. COLOUR PALETTE

SANDSTONE | TERRACOTTA | CEDAR GREEN | GLACIER WHITE | PEARL BLACK

SHADOW GREY | URBAN GREY

SANDSTONE(1)*

TERRACOTTA(2)*

CEDAR GREEN(2)*

GLACIER WHITE(1)

PEARL BLACK(2)

SHADOW GREY(2)

URBAN GREY(1)*

COLOUR AVAILABILITY	ESSENTIAL	EXPRESSION	EXTREME
SOLID PAINT			
Glacier White	•	•	•
METALLIC PAINT			
Pearl Black	o	o	o
Shadow Grey	o	o	o
Terracotta	-	o	o
Cedar Green	-	o	o
Urban Grey	-	o	o
Sandstone	-	o	o

(1) Metallic paint. (2) Opaque paint.
* Not available on essential.
Non-binding photos
- : not available; • : available as standard; o : available as an option.

essential

MAIN EQUIPMENT

EXTERNAL APPEARANCE
- "Pixelated" front grille with Dacia logo
- Brand light in the shape of an inverted "T" and automatic LED daytime running lights
- Front and rear bumpers, and side skid plates made from Starkle® recycled materials
- Black exterior door handles
- Black door mirrors
- Longitudinal roof bars
- Body tone front/rear bumpers
- 16" two-tone Erelia wheel trims
- Black front and rear skid plates

INTERIOR APPEARANCE
- White air vent centre
- Black door opening handles
- Luggage space cover (on 5-seater only)
- 1/3-2/3 splitfold rear seat (seat surface and backrest)
- Prefitted to accept YouClips
- New steering wheel(1)
- Specific fabrics for upholstery

ACTIVE AND PASSIVE SAFETY
- My Safety button to manage driver assistance systems
- Anti-locking braking system (ABS) + Emergency Brake Assist (EBA)
- Automatic emergency braking with pedestrian/cyclist detection
- Electronic Stability Control (ESC) with Hill Start Assist (HSA)
- Emergency call (E-call)
- Event (accident) data logger
- Road sign recognition and speeding alert
- Lane change warning
- Lane keeping assist
- Driver attention warning and drowsiness detection
- Front / rear "Rescue Code®" QR codes
- Driver's front airbag and passenger's front airbag can be disabled
- Side chest-level and curtain head airbags (front + rear)
- Lateral front and rear seat belts with pretensioner and force limiter
- Rear parking sensors

DRIVING AND CONTROL DEVICES
- Tyre inflation kit
- Electric power steering
- Stop & Start, ECO mode
- Rain and light sensors
- Speed limiter / cruise control

COMFORT
- Manual air conditioning
- Electric and automatic door locking while driving and folding key
- Electric front windows
- 1 x 12V socket in the front
- Height- and reach-adjustable steering wheel

MULTIMEDIA AND AUDIO
- New Media Control: DAB radio with steering wheel controls, jack socket and 1 USB-C socket, 2 speakers, Bluetooth® telephone system with satellite controls on the steering wheel, fixed smartphone holder on the dashboard, new Dacia Media Control smartphone app

expression

MAIN EQUIPMENT
expression = essential+

EXTERNAL APPEARANCE
- Body-tone outside door handles
- Body-tone door mirrors
- Modular longitudinal roof bars
- 3D PIP side protectors
- Shark fin aerial

INTERIOR APPEARANCE
- White air vent centre
- Steel Grey door opening handles
- Specific upholstery for expression version
- Fabric on dashboard and front door armrests
- Mid-high centre console with armrest + USB-C in the rear

ACTIVE AND PASSIVE SAFETY
- Electric parking brake with armrest with storage, 1 12V socket and 1 USB-C socket in the rear
- Reversing camera

VISIBILITY
- Front fog lights
- Electric door mirrors

COMFORT
- Soft feel height- and reach-adjustable steering wheel
- Electric rear windows
- One-touch-up driver window lift (with anti-pinch function), front passenger window lift (not-one-touch)
- 7" digital instrument panel (only on hybrid 155)
- Keyless entry (hands-free card)

MULTIMEDIA AND AUDIO
- Media Display: multimedia system with 10" touchscreen, DAB digital radio, smartphone mirroring and Wi-Fi, Bluetooth® connection, 4 speakers, 3 USB-C ports

extreme

MAIN EQUIPMENT
extreme = expression+

EXTERNAL APPEARANCE
- Body-colored door handles
- Body-colored exterior mirrors
- 16" Tamia black alloy wheels
- Privacy glass
- Roof bars

INTERNAL APPEARANCE
- Specific upholstery, Extreme version in MicroCloud
- Brown Copper decoration: trim strips on door panels, ventilation grilles
- Dashboard and door armrests in washable MicroCloud
- Rubber mats front and rear (including row 3), and door sill with topographic motifs
- Door opening handles in Steel Gray

ACTIVE AND PASSIVE SAFETY
- Front & rear parking sensors
- Multi view camera
- Automatic switching of high/low beam and folding electric door mirrors

COMFORT
- Automatic air conditioning
- Sliding tables for second-row passengers
- 7" digital driver display
- Electric parking brake
- Keyless start
- Hands free card
- Extended grip function

MULTIMEDIA AND AUDIO
- Media Nav Live: multimedia system with 10" touchscreen, connected navigation with real-time traffic info, DAB digital radio, smartphone replication via cable or wireless, Bluetooth® connection, satellite navigation commands, 6 speakers (4 woofers + 2 tweeters), 3 USB-C ports
- Front heated seats + Heated Steering wheel
- Removable smartphone holder

SIDE STEP PACK
Enhance the look and SUV style of your Jogger while making roof loading easier. The side steps also protect the bodywork from splashes during your daily journeys or outdoor adventures.

DACIA AERO CARGO BOX™
Optimise your storage space with the aerodynamically designed 310-litre Dacia towbar box. Compatible with 2 or 3 bike racks and their tilting platform, it allows for easy loading while maintaining access to the vehicle's boot.

TOOL-FREE REMOVABLE TOWBAR
Safely tow or carry your bike racks, trailers, boats or canoes with this tow bar designed by Dacia, capable of supporting up to 75 kg in vertical load and towing up to 1,200 kg. Thanks to the ball joint that can be easily removed without tools, the aesthetic appeal of your vehicle is maintained.

CYCLE PACK
Quick to attach to roof bars, adaptable to many bike sizes, it's the easiest way to transport your bike safely. Ideal option for maintaining good rear visibility and giving you complete free access to the luggage compartment.

INNATURE AWNING
Transform your vehicle into the perfect base camp with our InNature Dacia roof awning. Designed for explorers, hikers and weekend wanderers, it easily deploys to provide instant shade and shelter, whether you're on a sunny beach or at the start of a secluded trail. Made from sturdy, weather-resistant materials, it protects you from the sun and unexpected downpours. Compact when stored, spacious when open and compatible with Dacia longitudinal roof bars, this awning is your portable oasis wherever you go.

06. ENGINES

	TCe 110	155 HYBRID
ENGINES		
Energy	Petrol	Petrol/Electric
Fiscal rating (hp) (France)	6	5
Max. power kW CEE (hp) at an engine speed of (rpm)	81 (110) from 5,000 to 5,250	105 (140) at 5,600 combined
Max. torque Nm CEE (m.kg) at an engine speed of (rpm)	200 from 2,900 to 3,500	172 (combustion engine) from 3,000 to 4,000 + 205 (electric)
Gearbox type	Manual	Multimode automatic
Injection type	Turbo direct injection	Naturally aspirated
Capacity (cm^3)	999	1,789
Number of cylinders/valves	3/12	4/16
Emission control standard	Euro 6e bis	
BATTERY		
Traction battery	-	Lithium-ion / 230 V / 1.4 kWh
CHASSIS AND STEERING		
Tyre size	205/60 R16 92H	
Steering - Turning circle, kerb to kerb (m)	11.39	
Front suspension	Pseudo MacPherson with lower wishbone, coil spring suspension with telescopic hydraulic shock absorbers and anti-roll bar	
Rear suspension	Semi-rigid axle with anti-roll bar spring suspension and telescopic hydraulic shock absorbers	
PERFORMANCE		
Maximum speed (kmh)	180	
0-100kmh (s)	11.2	9
FUEL CONSUMPTION AND EMISSIONS(1)		
Approval protocol	WLTP(2)	
Fuel tank capacity (l)	50	50
CO_2 emissions (g/km)	136-137	104
Consumption over a combined cycle (l/100km)	5.0	3.8
VOLUMES AND WEIGHTS		
Max kerb weight	1,221	1,388
Gross train weight (GTW)	1,261	1,405
Max Gross Train weight	3,055	3,000
Gross vehicle weight (GVW)	1,855	2,000
Max. braked towing weight	1,200	1,200

(1) Official consumption and emissions according to applicable regulations. (2) WLTP (Worldwide Harmonised Light Vehicle Test Procedures): this new protocol provides results much closer to those found in daily use compared with the NEDC protocol. CO_2 emissions are certified using a standard, regulatory method. This method is identical for all manufacturers and enables vehicles to be compared with one another. (3) Total volume / fill volume.

06. EQUIPMENT & OPTIONS

	essential	expression	extreme
EXTERNAL APPEARANCE			
Brand light and automatic LED daytime running lights	•	•	•
Dacia logo black grille	White	White	White
Dacia rear lettering	White	White	Copper Brown
Front/rear bumpers	Body-coloured	Body coloured	Body coloured
Front and rear skid plates	Black	Megalith Grey	Megalith Grey
Side protection stickers / snorkel-type sticker	Starkle®	Starkle® New side protection	Starkle® Specific to extreme version / •
Exterior door handles	Black	Body-coloured	Body coloured
Door mirrors	Black	Body-coloured	Copper Brown
Longitudinal roof bars	•	-	-
Modular longitudinal roof bars	-	•	•
16" Erelia two-tone wheel trims	•	•	-
16" Tamia black alloy wheels	-	-	•
Shark fin aerial	-	•	•
INTERIOR APPEARANCE			
Centre of air vents	Black	White	Copper Brown
Air vent surrounds	Fog Grey	Fog Grey	Fog Grey
Door opening handle	Black	Steel Grey	Steel Grey
Upholstery on the dashboard and front door armrests/trim on the front door panels	- / -	Fabrics / -	MicroCloud/Copper Brown plastic-coated textile
1/3 - 2/3 split-fold rear bench seatback	•	•	•
2 independently folding and removable 3rd row seats	•	•	•
Soft-Feel steering wheel and Steel Grey decoration	-	•	•
Dacia marking on rubber floor mat	-	-	•
Luggage space cover	•	•	•
YouClip attachment system	•	•	•
ACTIVE AND PASSIVE SAFETY			
My Safety button to manage driver assistance systems	•	•	•
Anti-locking braking system (ABS) + Emergency Brake Assist (EBA)	•	•	•
Automatic emergency braking with pedestrian/ cyclist detection	•	•	•
Electronic Stability Control) with Hill Start Assist (HSA)	•	•	•
Emergency call (E-call)	•	•	•
Event (accident) data recorder	•	•	•
Traffic sign recognition with speed alert	•	•	•
Lane change warning	•	•	•
Lane keeping assist	•	•	•
Driver attention alert	•	•	•
Front / rear "Rescue Code®" QR Code	•	•	•
Driver's front airbag / passenger's side airbag, can be disabled	•/•	•/•	•/•
Side, thorax and head curtain airbags (front + rear)	•	•	•
Front and rear side seat belts with pretensioner and load limiter	•	•	•
Hill Start Assist	•	•	•
Rear parking sensors	•	•	•
Rear-view camera	-	•	•
Multiview camera	-	-	•
Front parking distance control	-	-	•
Blind spot warning	-	-	•
Driver attention warning and drowsiness detection	•	•	•
Automatic main/dipped beam headlight activation	-	-	•
Electric parking brake with armrest and storage compartment and 1 USB-C socket in the rear	-	•	•

	essential	expression	extreme
DRIVING AND CONTROL INSTRUMENTS			
3.5" black-and-white digital instrument panel	•	•	-
7" digital instrument panel	-	- / • HEV	•
Tyre pressure detection	•	•	•
Row 2 Isofix points for child seats in both side rear seats	•	•	•
Electrical power steering	•	•	•
Stop & Start, ECO Mode	•	•	•
Hands-free card	-	•	•
Rain and light sensors	•	•	•
Speed limiter / cruise control	•	•	•
Extended Grip	-	-	•
VISIBILITY			
Front fog lights	-	•	•
Electric door mirrors	-	•	•
Electrically folding door mirrors	-	•	•
COMFORT			
Wireless charging	-	-	•
Low central console with central armrest	•	-	-
High centre console with central armrest and 1 USB-C sockets at the rear	-	•	•
Manual heating and air conditioning system	•	-	-
Automatic heating and air conditioning system	-	•	•
Central locking of doors and automatic locking when driving	•	•	•
Driver and passenger electric front windows	•	•	•
One-touch driver-seat window control (with anti-trapping function), non one-touch passenger side	-	•	•
Rear electric windows	-	•	•
Height and depth- adjustable steering wheel	•	•	•
1 front 12 V socket	•	•	•
Heated front seats	-	-	•
Heated steering wheel	-	-	•
Aeroplane style sliding tables for passengers in row 2	-	-	•
Tilting rear quarter glass	-	-	•
MULTIMEDIA AND AUDIO			
New Media Control: DAB radio with steering wheel controls, jack socket and 1 USB-C socket, 2 speakers, Bluetooth® telephone system with satellite controls on the steering wheel, fixed smartphone holder on the dashboard, new Dacia Media Control smartphone app	•	-	-
Media Display: multimedia system with 10" touchscreen, DAB digital radio, smartphone mirroring via USB cable or wirelessly via Wi-Fi, Bluetooth® connection, 4 speakers, 3 USB-C ports at the front and 1 USB-C port at the back of the centre console	-	•	-
Media Nav Live: 10" screen, navigation with real-time traffic + Arkamys® 6-speaker 3D audio system + DAB digital radio, smartphone mirroring via USB cable or wirelessly via Wi-Fi, Bluetooth® connection, 3 USB-C ports in the front and 1 USB-C at the back of the centre console	-	-	•
Removable telephone holder	-	-	•

- : not available; • : available as standard; o : available as an option. ○: Pack options

06. DIMENSIONS

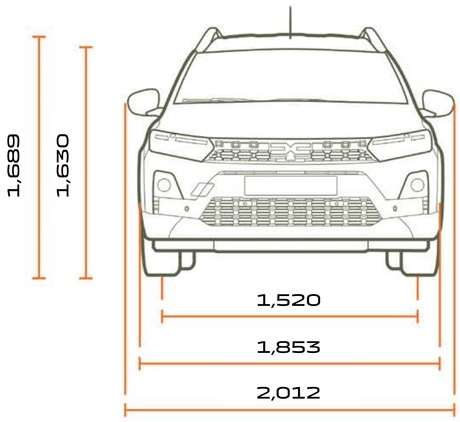

FRONT VIEW 7-SEATER

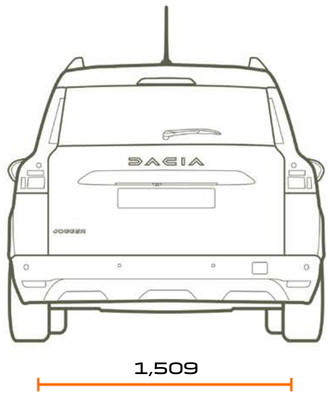

REAR VIEW 7-SEATER

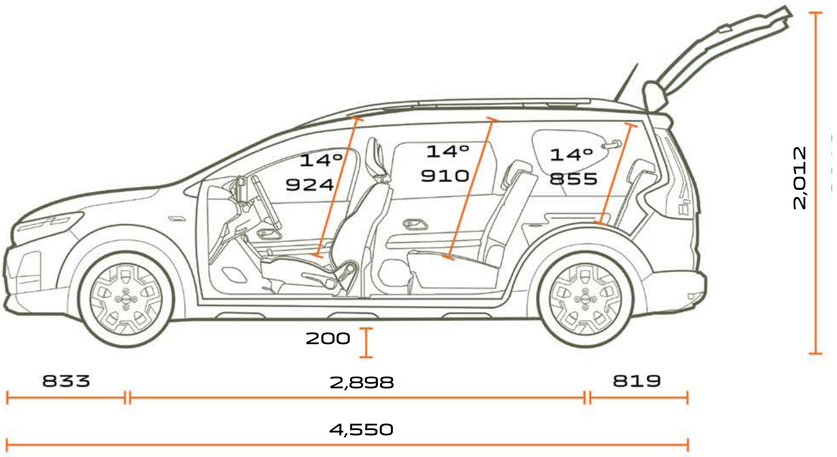

SIDE VIEW 7-SEATER

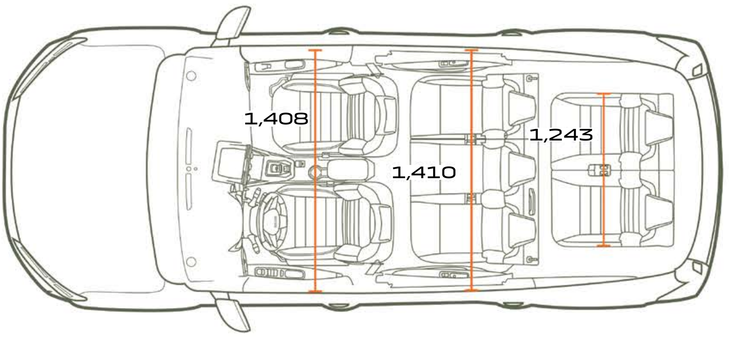

TOP VIEW 7-SEATER

BOOT VOLUME (in dm³ - vda standard/litres)	7-SEATER
Minimum boot space (ISO 3832 standard)	160/212
Maximum boot space (ISO 3832 standard)	1,807/2,085
2nd row in place and 3rd row folded down	565/699
2nd row in place and 3rd row removed	696/820

Dimensions in mm.

Every precaution has been taken to ensure that the contents of this brochure were accurate and up to date at the time of its release. This document has been created using pre-production and prototype models. As part of its policy of continuous product improvement, Dacia reserves the right to modify at any time the specifications, vehicles and accessories described and shown. Any such modifications are communicated to Dacia dealers as quickly as possible. Depending on the country of sale, certain versions may differ and certain equipment may be unavailable (as standard, on option or as an accessory). Please consult your Dacia brand representative for the latest information. Because of the limitations associated with the medium, the colours featured in this document may differ slightly from those of the actual paintwork or interior trim. All rights reserved. Reproduction in any format and by any means of all or part of this brochure is prohibited without prior written authorisation from Dacia.

Dacia recommends Castrol

PUBLICIS – PHOTO CREDITS: S. STAUB, ©RENAULT MARKETING 3D-COMMERCE – DECEMBER 2025

PILAKOUTAS GROUP

77773344

www.pilakoutasgroup.com.cy

Nicosia Showroom: 18 - 20 Aristidou Str., 2370 Agios Dometios

Larnaca Showroom: 17 Eleftherias Avenue, 7102 Aradippou

Limassol Showrooms: 41 Theophanous Kritos, 4152 Kato Polemidia
9-15 Andrea Kariolou Str., 4102 Agios Athanasios

Paphos Showroom: 43 Mesogis Avenue, 8280 Paphos

dacia.com.cy